Optimal Design of a Modular Power Converter Based on Medium Frequency AC-Link for Offshore Wind Turbines

Rene A. Barrera-Cardenas and Marta Molinas, Department of Electric Power Engineering, NTNU

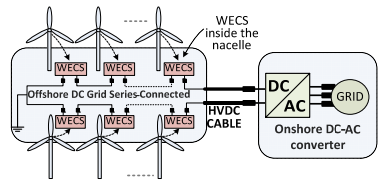

Optimal design targeting three main objectives: Losses, Volume and Mass

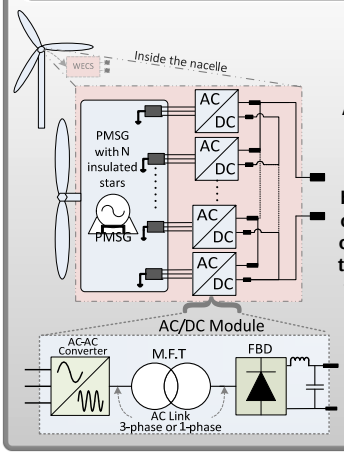

Identify the transformer frequency, the AC/AC converter topology and number of modules for the best operation of overall system in order to minimize the power losses, the components volume and the overall mass of the entire conversion system

AC-LINK	Converter Topology (AC/AC)		
3 phase Sinusoidal waveform	**B2B3p** Back-to-Back	**IMC** Indirect Matrix Converter	**DMC** Direct Matrix Converter
Squared waveform	**B2B3pSq** Back-to-Back with 3-phase output	**B2B-1p** Back-to-Back with 1-phase output	**RMC** Reduced Matrix Converter

Back to Back topologies

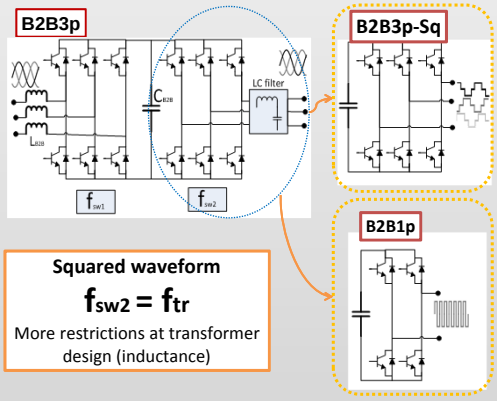

Squared waveform

$f_{sw2} = f_{tr}$

More restrictions at transformer design (inductance)

Matrix topologies

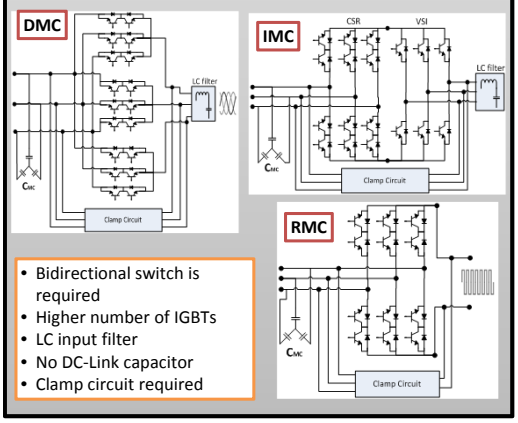

- Bidirectional switch is required
- Higher number of IGBTs
- LC input filter
- No DC-Link capacitor
- Clamp circuit required

Performance Indicators

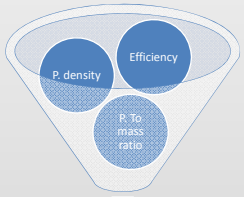

Performance indicator

Pareto frontier

Efficiency

$$\eta = \frac{P_{out}}{P_{in}} = \frac{P_{in} - P_{losses}}{P_{in}}$$

Power Density

$$\rho = \frac{P_{out}}{vol} = \frac{P_{in} - P_{losses}}{volume}$$

Power to mass ratio

$$\gamma = \frac{P_{out}}{mass} = \frac{P_{in} - P_{losses}}{mass}$$

- Evaluation of power losses, volume and weight.
- Model of the main elements in the system.

Analytical or empirical model + Data – Simulation and/or datasheet reference → Regression model

	AC/AC converter	Converter Filters	Medium Freq. Transformer	Diode Rectifier and DC filter
Power Losses	**Semiconductors, Heat sink fan**, driver losses.	**Inductor – Reactor,** AC Capacitor	Core, Winding and isolation	Diode module, DC inductor
Volume	**IGBT Module, Heat sink, DC capacitor,** driver system, protection system.	**Inductor and AC capacitors**	Core, winding and isolation	Diode module, heat sink, DC inductor and DC capacitor.

Medium Freq. Transformer Design

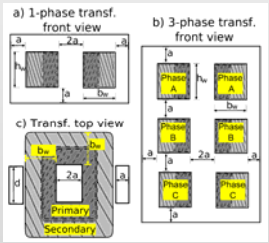

Transformer Volume is result of iterative process with parameterized core dimensions.

Design example of a 3 MW–500 Hz single-phase shell-type transformer.

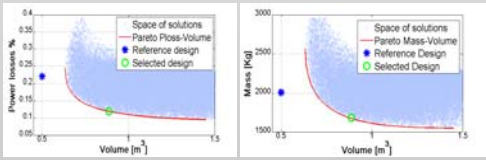

Transformer volume–mass frontier variation with ac-link frequency for 3.33 MW transformer.

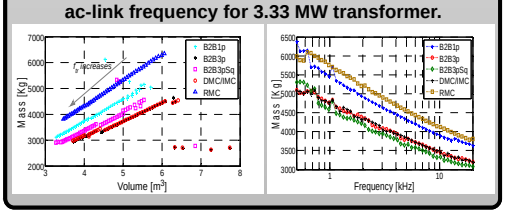

Results

Parameter	Value
Total Power	10 [MW]
Input Voltage	690[V]
Output DC Voltage	33 [kV]
Generator Frequency	50[Hz]
DC-Link Voltage ripple	5%
Current Input ripple	3%
Current Output ripple	10%
Generator Power factor	0.9
Magnetic material	Metglas alloy 2605SA1
Max. DT Transformer	70 K
AC-Link Freq. [kHz]	[0.5, 20]
Number of modules	[1, 25]

Device	Reference
Ref. Inductor (filters)	Siemens 4EU and 4ET
Ref. DC-link Capacitor	EPCOS MKP DC B256XX
Ref. AC-Capacitor	EPCOS MKP AC B2536XX
IGBT Module	Infineon IGBT4 FZXXR17HP4
DIODE Module	Infineon IGBT3 DDXXS33HE3
Heat Sink	Bonded Fin - DAU series BF
Axial FAN – Heatsink	Semikron SKF 3-230 series

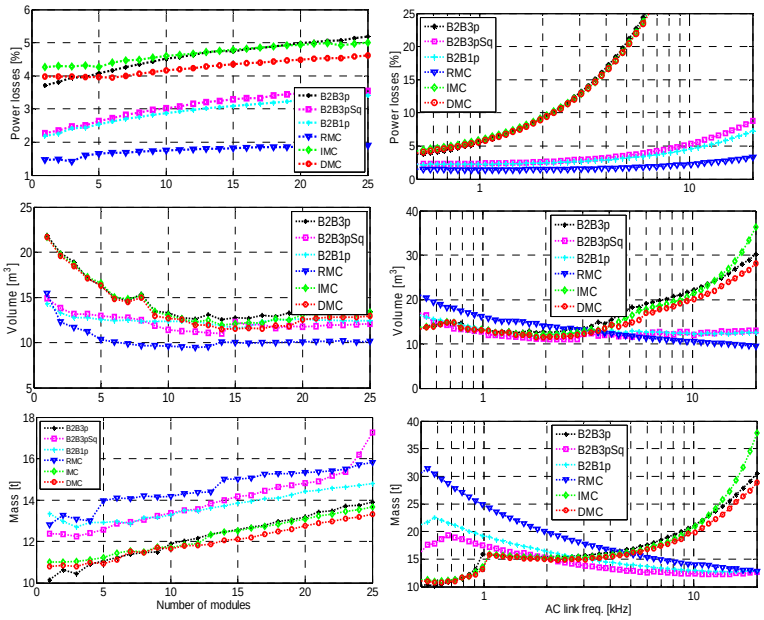

B2B VSR - Selection of f_{sw1}

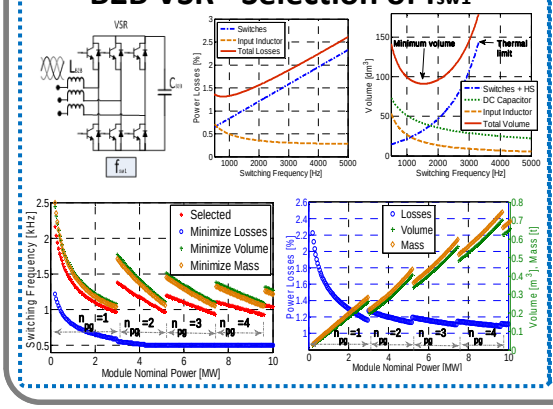

PARETO FRONT

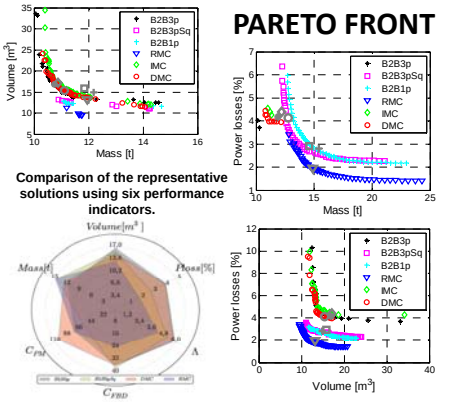

Comparison of the representative solutions using six performance indicators.